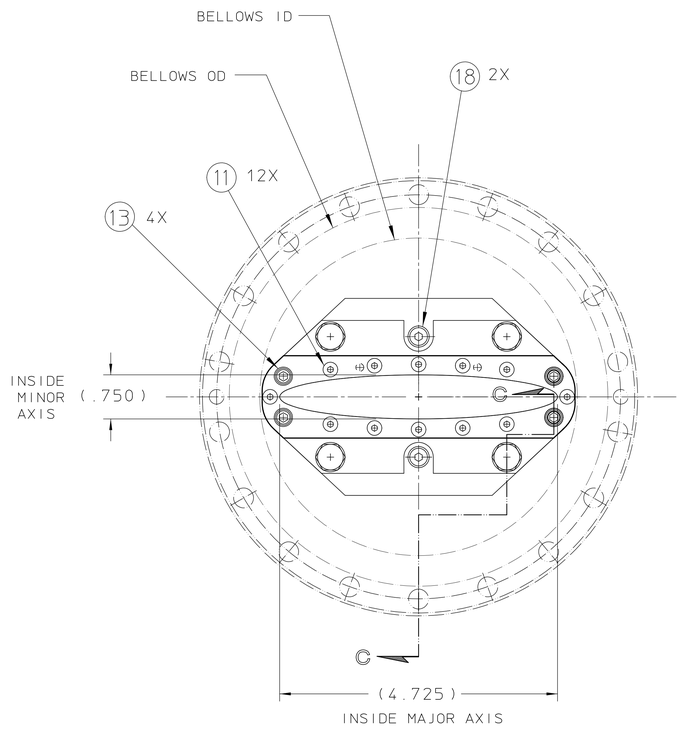

SECTION A-A

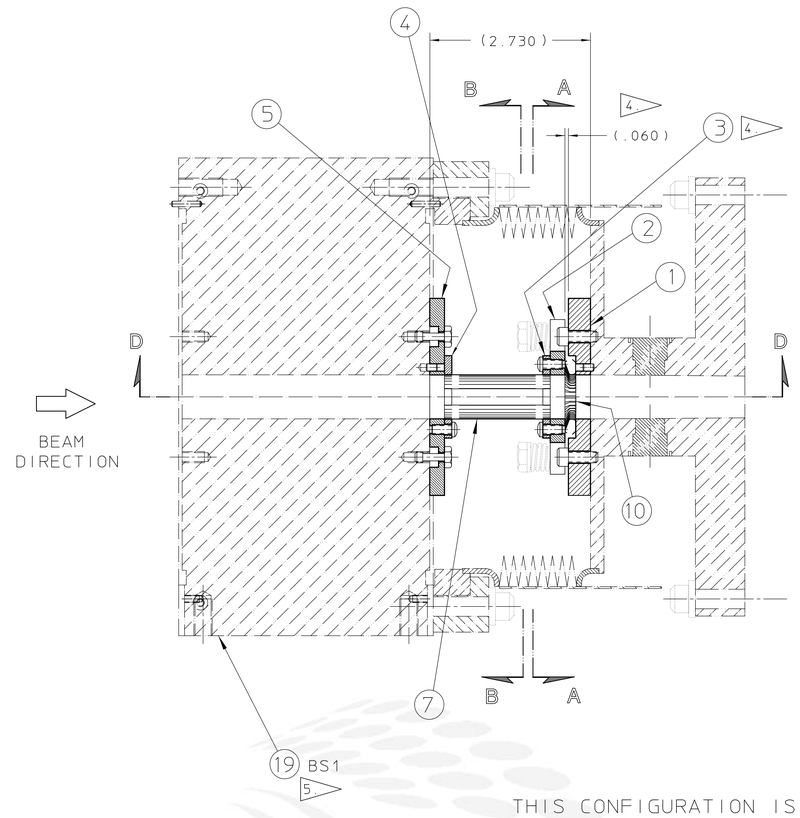

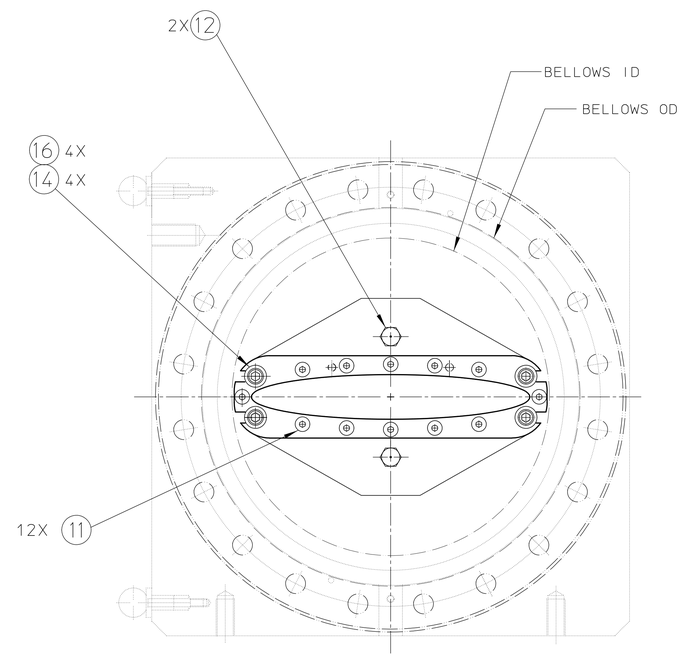

SECTION B-B

THIS CONFIGURATION IS COMMON AT 5 PLACES IN THE STORAGE RING
THESE 5 PLACES ARE AT THE BEAM ENTRANCE END OF
STRAIGHT SECTIONS SR2, SR7, SR9, SR11, & SR12

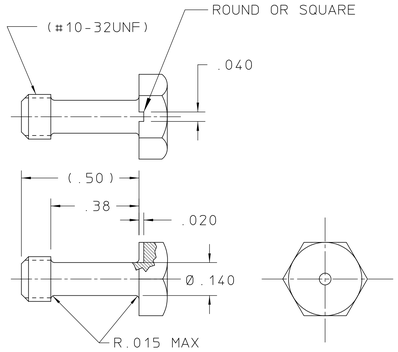

ITEM 12 DETAIL 3
SCALE : 4/1

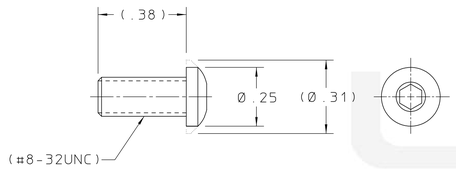

ITEM 11 DETAIL 3
SCALE : 4/1

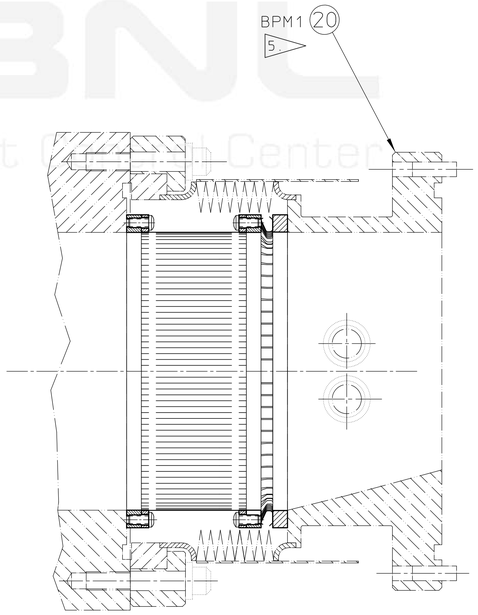

SECTION D-D

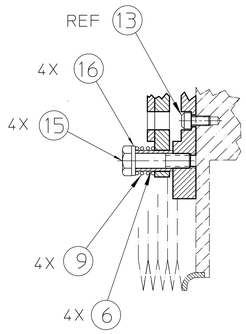

SECTION C-C

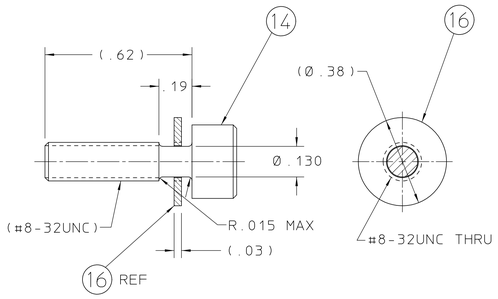

ITEM 14 & 16 DETAIL 3
SCALE : 4/1

NOTES:

THIS IS AN ULTRA-HIGH VACUUM ASSEMBLY

1. THE USE OF RESIN BONDED ABRASIVES UNDER POWER IS PROHIBITED.

2. THE USE OF CUTTING FLUID CONTAINING SULFUR OR SILICONE IS PROHIBITED.

3 MODIFY ITEMS 11,12,14 & 16 AS SHOWN.

4 SEE ENGINEERING NOTE M7274 (LSME 506) 'STRAIGHT SECTION RF FLEX BANDS'

5 SEE LSME 478A FOR STORAGE RING COMPONENT NAMING.

REQD	ITEM	PART NO.	DESCRIPTION
REF	20	23L3456	ADAPTOR WITH BPM, HELICOFLEX, 4.725 X .750 ELLIPSE
REF	19	23L3596	SPACER BLOCK (4.725 X .750 ELLIPSE)
			23Q4406
2	18		CAP SCR, HEX HD, 10-32 X .50 LG. VENTED,AG PLATED, UC COMP. #H-1008-A
4	17		WASHER FLAT 1/4", 1/2"O.D. X.063 THK, SST, TYPE A, GRADE 2, CLASS B
4	16		WASHER FLAT #6, 3/8"O.D X.031 THK, SST, TYPE A, GRADE 2, CLASS B
4	15		SCR, HEX HD, 1/4-20 X 1.0 LG. VENTED,AG PLATED, UC COMP. #H-2016-A
4	14		CAP SCR, SOC HD, 8-32 X .62 LG. VENTED,AG PLATED, UC COMP. #C-810-A
4	13		CAP SCR, SOC HD, 8-32 X .31 LG. VENTED,AG PLATED, UC COMP. #C-805-A
2	12		CAP SCR, HEX HD, 10-32 X .50 LG. VENTED,AG PLATED, UC COMP. #H-1008-A
24	11		SCR, BUTTON HD, 8-32 X .38 LG. VENTED,AG PLATED, UC COMP. #BU-806-A
	10		RF SHIELDING GASKET -Be Cu, INSTRUMENT SPECIALTIES #97-921
4	9		SPRING, COMP- Be Cu, WIRE SIZE Ø.057, .360 I.D., .625 FREE LG .250 SOLID HGT,14# LOAD @ SOLID,SQ & GRD ENDS.
	8		
1	7		FLEX BAND-Be Cu
4	6	23L7452	FLEX BAND-BUSHING
1	5	23L0984	FLANGE, .750" APERTURE
1	4	23L1014	CLAMP, .750" APERTURE
1	3	23L8574	CLAMP, SPRING END
1	2	23L7194	SPRING PLATE
1	1	23L7414	BASE PLATE, .750" APERTURE

INCOMPLETE DRAWING 11-12-96

REV	DWG	CHK	ZONE	DATE	CHANGES

UNLESS OTHERWISE SPECIFIED
TOLERANCES: .X ± — FRAC. ± — ; .XX ± .015 ANGLES ± — ; .XXX ± .005 FINISH 125
THREADS ARE CLASS 2
CHAMFER ENDS OF ALL SCREW THREADS 30°.
CUT 1.5 PITCH THRD RELIEF WITH ROUND NOSE TOOL ON MACHINE CUT THREADS.
BREAK EDGES .016 MAX. ON MACHINED WORK
REMOVE BURRS WELD SPLATTER & LOOSE SCALE
REFERENCES: ANSI Y14.5 & B46.1.

SHOP ORDERS: ACCT. NO. — SERIAL NO. — DATE ISSD — DATE REQD. — NO. REQD. — DELIVER TO — SURFACE TREATMENT — IDENT. METH.

DWG. BY N.SEARLS DATE 9-21-92
CHK. BY T.HENDERSON DATE

LAWRENCE BERKELEY LABORATORY
UNIVERSITY OF CALIFORNIA-BERKELEY
ALS - STORAGE RING
VACUUM CHAMBERS - TRANSITION STRAIGHT SECTION
FLEX BAND ASSEMBLY - SPACER BLOCK / BPM HOLDER

PATENT CLEAR | DWG. TYPE C - A | SHOWN ON 23Q4106 | SCALE 1/1 | DO NOT SCALE PRINTS
MICROFILMED | DESIGN ACCT. NO. | CATEGORY CODE AL0531 | DWG. NO. 23Q4406 | SIZE | REV.

AUTO GENERATED PDF – Dec 13 2005 22:47:37 PST
Officially Released to the LBNL Document Control Center
Released: DCC Auth Key: KP7PCKZELN
Downloaded by: Robert M Duarte at March 30, 2009 20:24:23