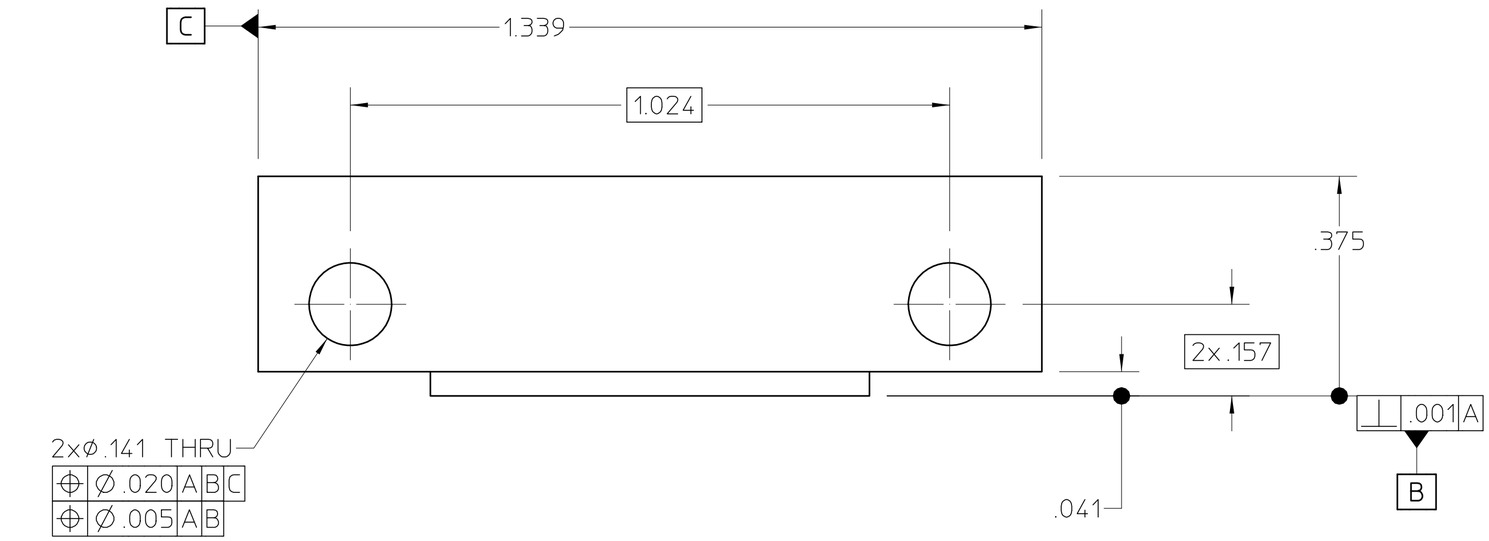

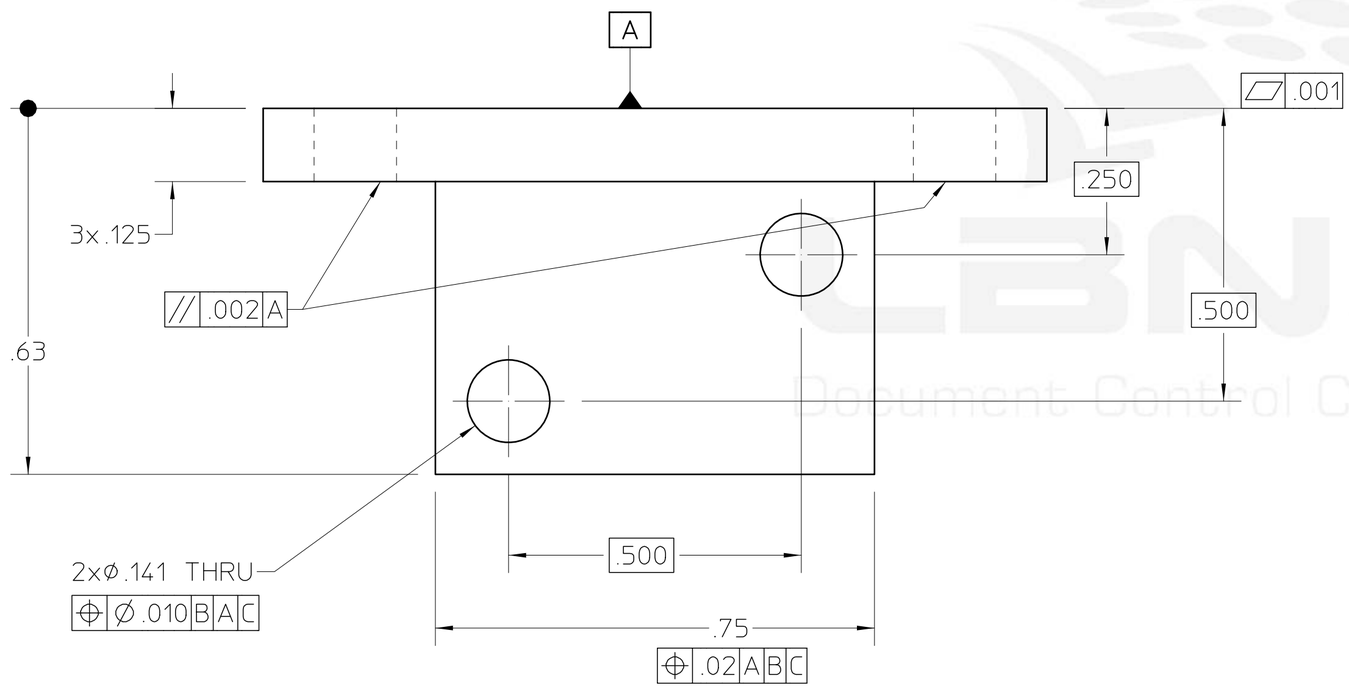

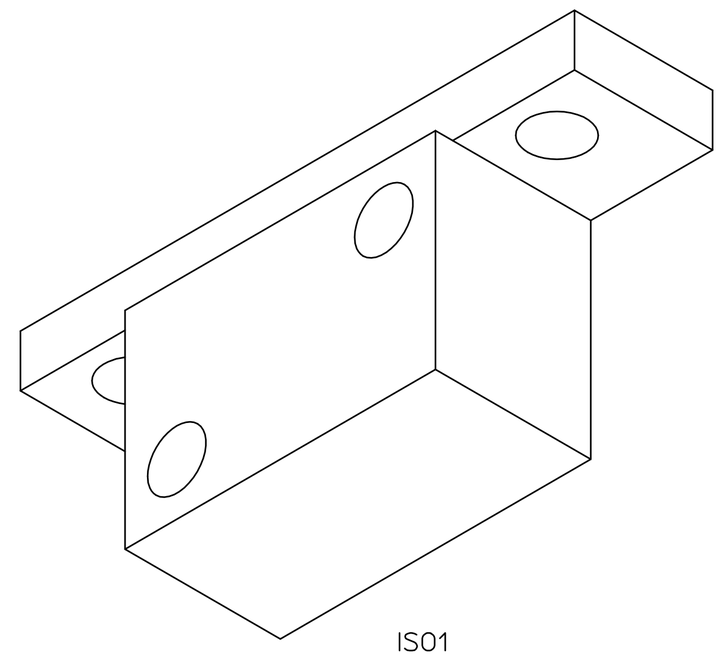

NOTES:
1. ALL DIMENSIONS ARE IN INCHES.
2. DEGREASE.

REV	AUTHOR	APPROVER	DATE	CHANGE DESCRIPTION
B	tmiller	tmiller	06-18-07	.157 WAS .160
A	tmiller	tmiller	05-29-07	INITIAL REVISION

UNLESS OTHERWISE SPECIFIED
TOLERANCES: .X± .- .XX±.01 .XXX±.005
FRACTIONS: ± -/--
ANGLES: ± 1°
MACH. SURFS.: 63 ✓ OR BETTER
REF:ASME Y14.5M-1994, THREADS ARE CLASS 2
BREAK EDGES .016 MAX. ON MACHINED WORK
REMOVE BURRS, WELD SPLATTER & LOOSE SCALE

MAT 2: , NOTES:
MAT 1: , ALUMINUM 6061-T6 NOTES:

PROJECT NAME: Advanced Light Source
UNIQUE NUMBER: AL-0028-9665
DO NOT SCALE PRINT SCALE: 5 : 1
CATEGORY CODE: AL4041
THIRD ANGLE PROJECTION

ERNEST ORLANDO LAWRENCE BERKELEY NATIONAL LABORATORY
UNIVERSITY OF CALIFORNIA
ALS - INSERTION DEVICE BEAMLINES
BL 4.0.3 - BEAMLINE GENERAL
BRACKET - RENISHAW READ HEAD
SHEET 1 OF 1 SIZE: C DWG NO: 26E612 REV B

Officially Released to the LBNL Document Control Center
Released: June 18th, 2007 DCC Auth Key: T0EPV1U0VD
Downloaded by: Nicholas Kelez at October 26, 2009 11:01:05
AUTO GENERATED PDF
Jun 18 2007 11:11:13 PST