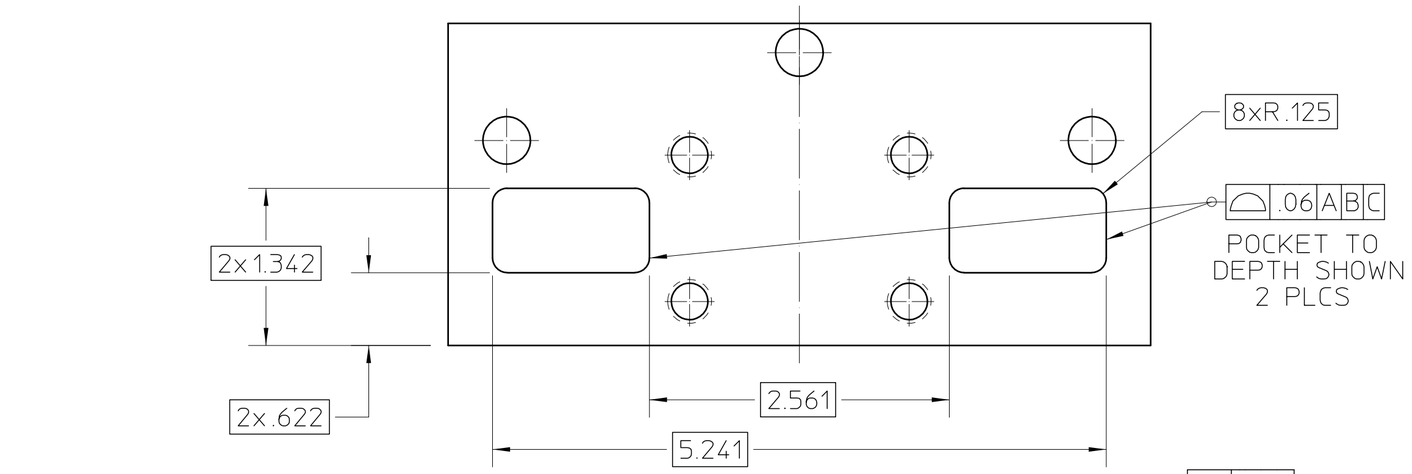

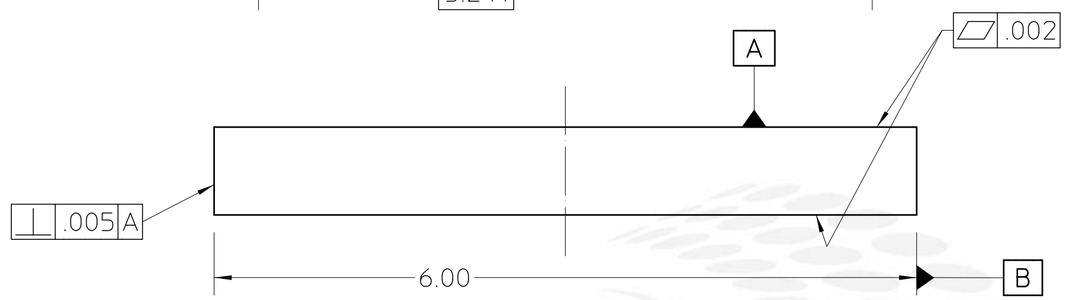

NOTES:

1. ALL DIMENSIONS ARE IN INCHES. NOT ALL HIDDEN LINES SHOWN.
2. BLACK ANODIZE.

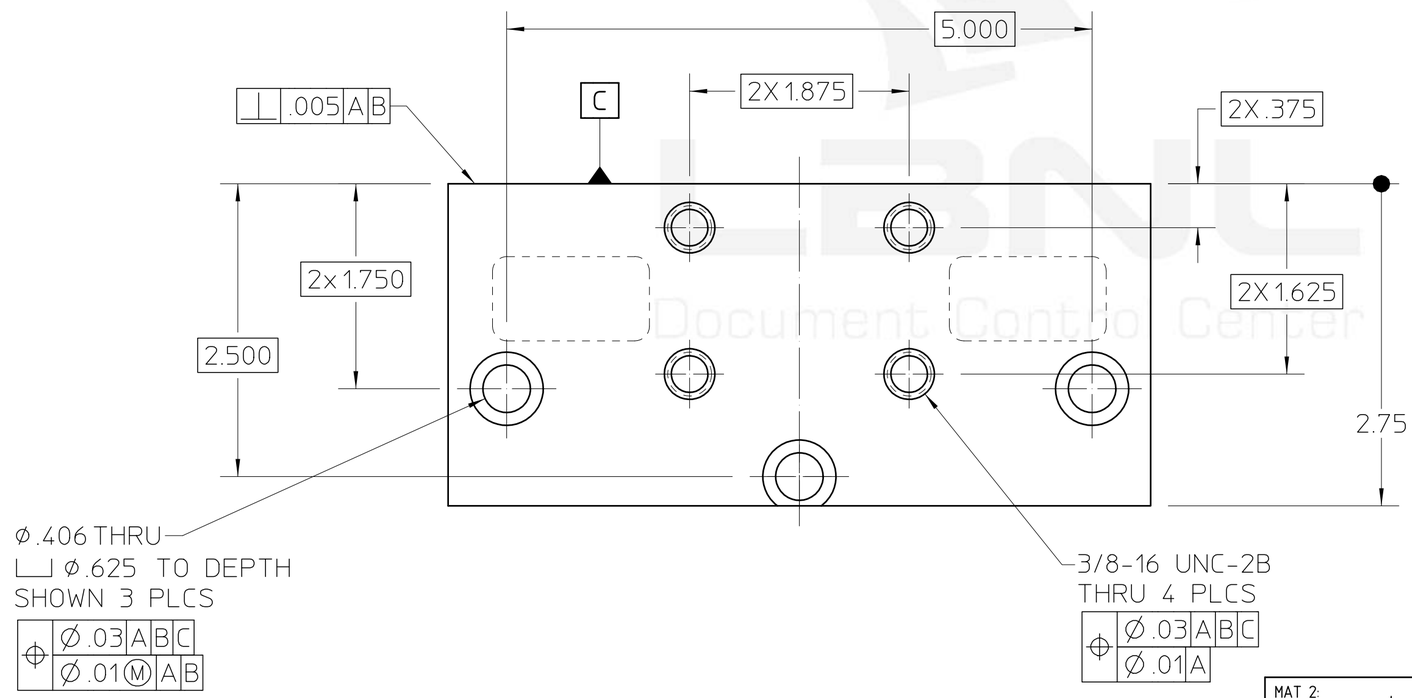

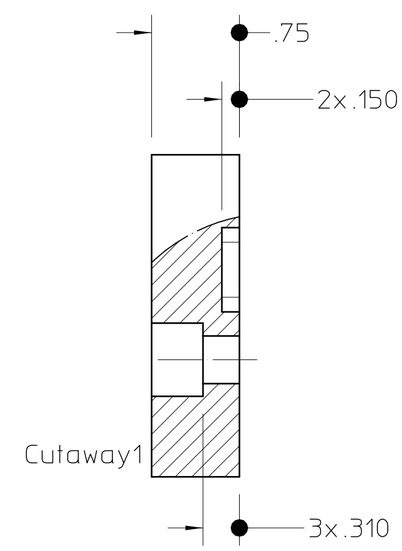

REV	AUTHOR	APPROVER	DATE	CHANGE DESCRIPTION
D	tmiller	kelez	10-23-09	MODIFIED TO USE CLEVIS BLOCKS
C	tmiller	tmiller	08-28-08	1.128 / 1.125 WAS 1.190 / 1.187
B	tmiller	tmiller	08-09-07	ADDED BACK VIEW AND POCKETS IN DATUM -A-
A	tmiller	tmiller	05-29-07	INITIAL REVISION

UNLESS OTHERWISE SPECIFIED
TOLERANCES: .X± .- .XX±.02 .XXX±.01
FRACTIONS: ± -/--
ANGLES: ± 1°
MACH. SURFS.: 125 ✓ OR BETTER
REF: ASME Y14.5M-1994, THREADS ARE CLASS 2
BREAK EDGES .016 MAX. ON MACHINED WORK
REMOVE BURRS, WELD SPLATTER & LOOSE SCALE

MAT 2: , NOTES:
MAT 1: , ALUMINUM 6061-T6 NOTES:

PROJECT NAME: Advanced Light Source
UNIQUE NUMBER: AL-0031-1100
DO NOT SCALE PRINT SCALE: 1:1
CATEGORY CODE: AL4041
THIRD ANGLE PROJECTION

ERNEST ORLANDO LAWRENCE
BERKELEY NATIONAL LABORATORY
UNIVERSITY OF CALIFORNIA

ALS - INSERTION DEVICE BEAMLINES
BL 4.0.3 - BEAMLINE GENERAL
CLEVIS BASE

SHEET 1 OF 1 SIZE: C DWG NO: 26E623 REV D

Officially Released to the LBNL Document Control Center
Released: October 23rd, 2009 DCC Auth Key: SOI39MGVO7
Downloaded by: Nicholas Kelez at October 26, 2009 11:00:35
AUTO GENERATED PDF
Oct 23 2009 12:18:12 PST