NOTES:

1. ALL DIMENSIONS ARE IN INCHES AND APPLY AFTER PLATING.
2. NOT ALL HIDDEN LINES SHOWN.
3. CLEAR ANODIZE.

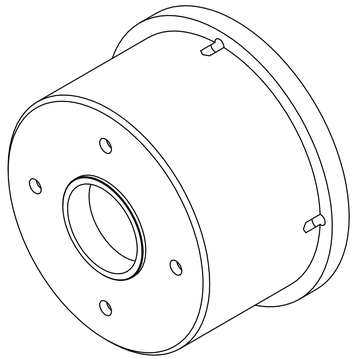

ISO2
SCALE 1:1

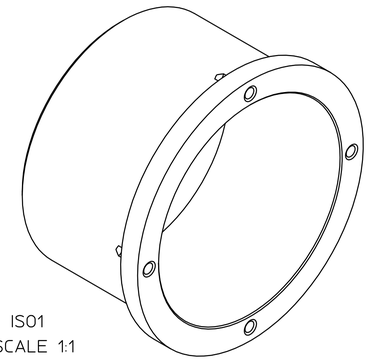

ISO1
SCALE 1:1

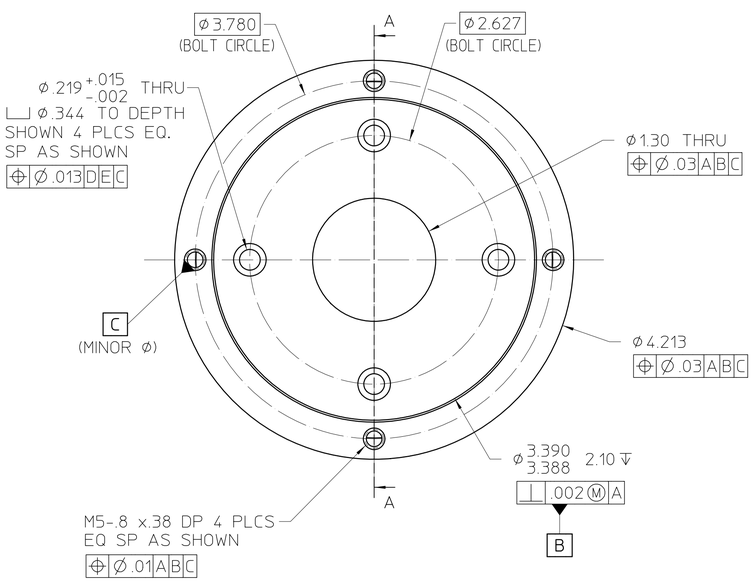

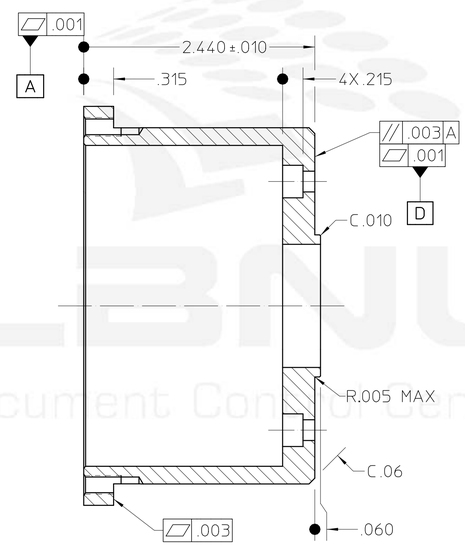

Section A-A

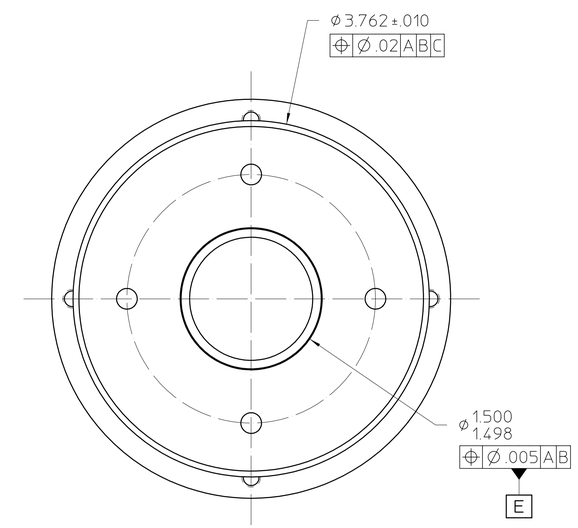

REV	AUTHOR	APPROVER	DATE	CHANGE DESCRIPTION
C	tmiller	kelez	10-23-09	REDESIGNED FOR NEMA 23 COMPATABILITY
B	tmiller	tmiller	09-02-08	2X DIA .221 THRU WAS 4X. ADDED M5 PATTERN. 4X DIA .281 THRU WAS 4X DIA .221 THRU
A	tmiller	tmiller	05-29-07	INITIAL REVISION

UNLESS OTHERWISE SPECIFIED
TOLERANCES: .X± .- .XX± .02 .XXX± .005
FRACTIONS: ± -/--
ANGLES: ± 1°
MACH. SURFS.: 125 ✓ OR BETTER
REF: ASME Y14.5M-1994, THREADS ARE CLASS 2
BREAK EDGES .016 MAX. ON MACHINED WORK
REMOVE BURRS, WELD SPLATTER & LOOSE SCALE

MAT 2: . NOTES:
MAT 1: . ALUMINUM 6061-T6 NOTES:

PROJECT NAME: Advanced Light Source
UNIQUE NUMBER: AL-0031-7709
DO NOT SCALE PRINT
CATEGORY CODE: AL 4 0 4 1
SCALE: 1.25:1
THIRD ANGLE PROJECTION

ERNEST ORLANDO LAWRENCE
BERKELEY NATIONAL LABORATORY
UNIVERSITY OF CALIFORNIA

ALS - INSERTION DEVICE BEAMLINES
BL 4.0.3 - BEAMLINE GENERAL
GEARBOX ADAPTER

SHEET 1 OF 1 | SIZE: D | DWG NO: 26E717 | REV C

AUTO GENERATED PDF
Oct 23 2009 12:21:13 PST

Officially Released to the LBNL Document Control Center
Released: October 23rd, 2009 DCC Auth Key: DN8JJYO7A0R
Downloaded by: Nicholas Kelez at October 27, 2009 10:54:11