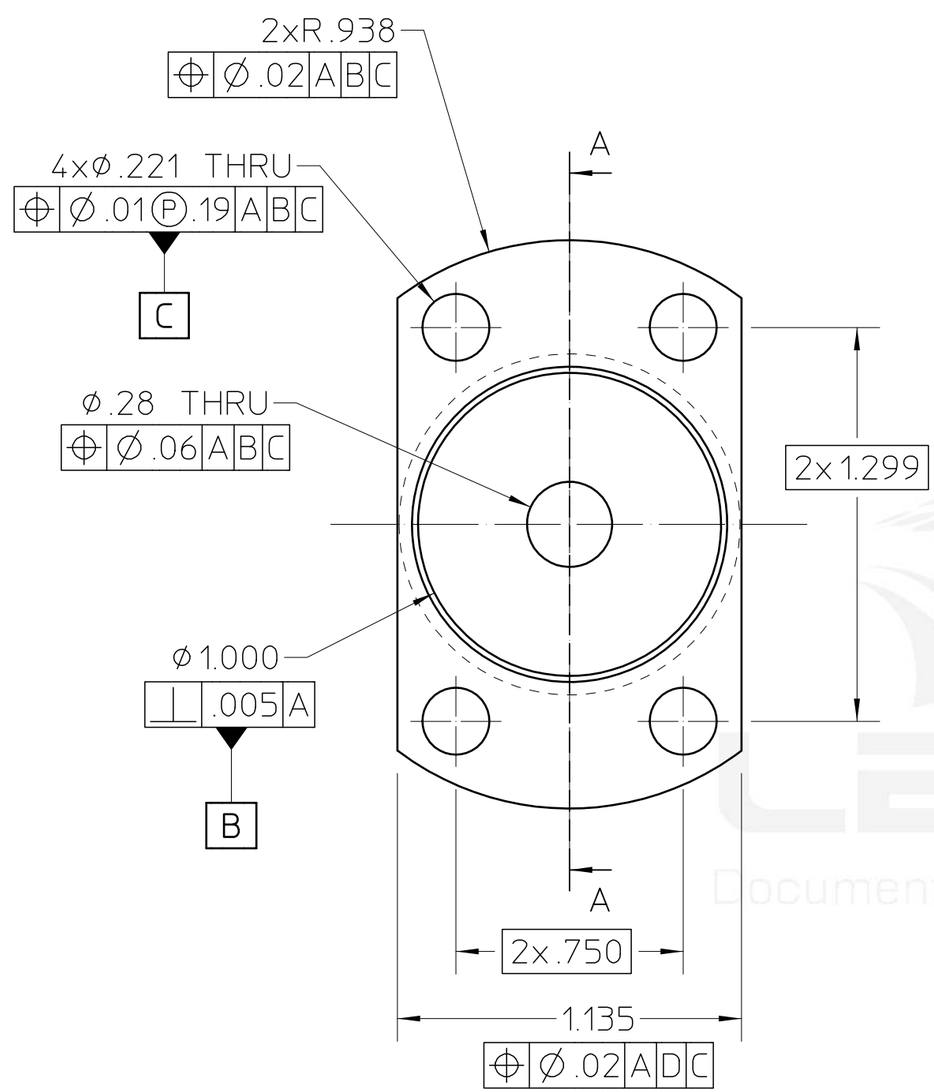

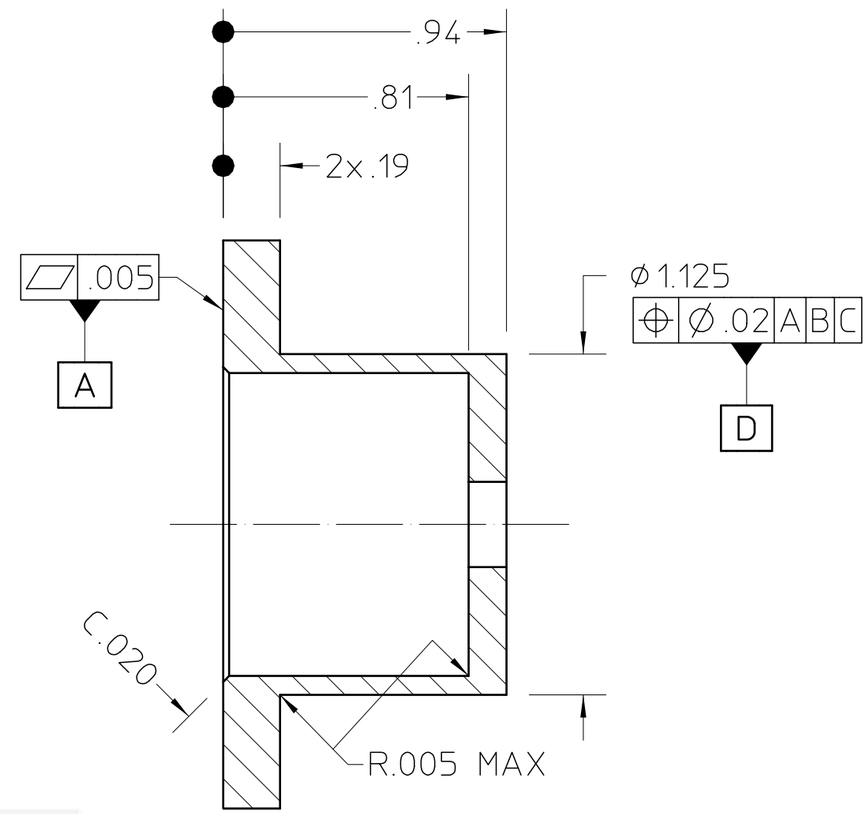

Section A-A

NOTES:
1. ALL DIMENSIONS ARE IN INCHES.
2. BLACK ANODIZE.

REV	AUTHOR	APPROVER	DATE	CHANGE DESCRIPTION
A	tmiller	tmiller	05-29-07	INITIAL REVISION

UNLESS OTHERWISE SPECIFIED
TOLERANCES: .X± .- .XX±.01 .XXX±.005; FRACTIONS: ± -/--; ANGLES: ± 1°; MACH. SURFS.: 63 ✓ OR BETTER
REF: ASME Y14.5M-1994, THREADS ARE CLASS 2
BREAK EDGES .016 MAX. ON MACHINED WORK
REMOVE BURRS, WELD SPLATTER & LOOSE SCALE

MAT 2: , — NOTES:
MAT 1: , ALUMINUM 6061-T6 — NOTES:

PROJECT NAME: Advanced Light Source
UNIQUE NUMBER: AL-0031-9319
DO NOT SCALE PRINT — SCALE: 2 : 1
CATEGORY CODE: AL4041
THIRD ANGLE PROJECTION

ERNEST ORLANDO LAWRENCE BERKELEY NATIONAL LABORATORY
UNIVERSITY OF CALIFORNIA
ALS - INSERTION DEVICE BEAMLINES
BL 4.0.3 - BEAMLINE GENERAL
SPRING RETAINER
SHEET 1 OF 1 — SIZE: B — DWG NO: 26E721 — REV A

AUTO GENERATED PDF
May 30 2007 6:08:15 PST

Officially Released to the LBNL Document Control Center
Released: May 29th, 2007 DCC Auth Key: NKEQI5OAE5
Downloaded by: Nicholas Kelez at October 26, 2009 11:00:10