NOTES:
1. ALL DIMENSIONS ARE IN INCHES.
2. DEGREASE.

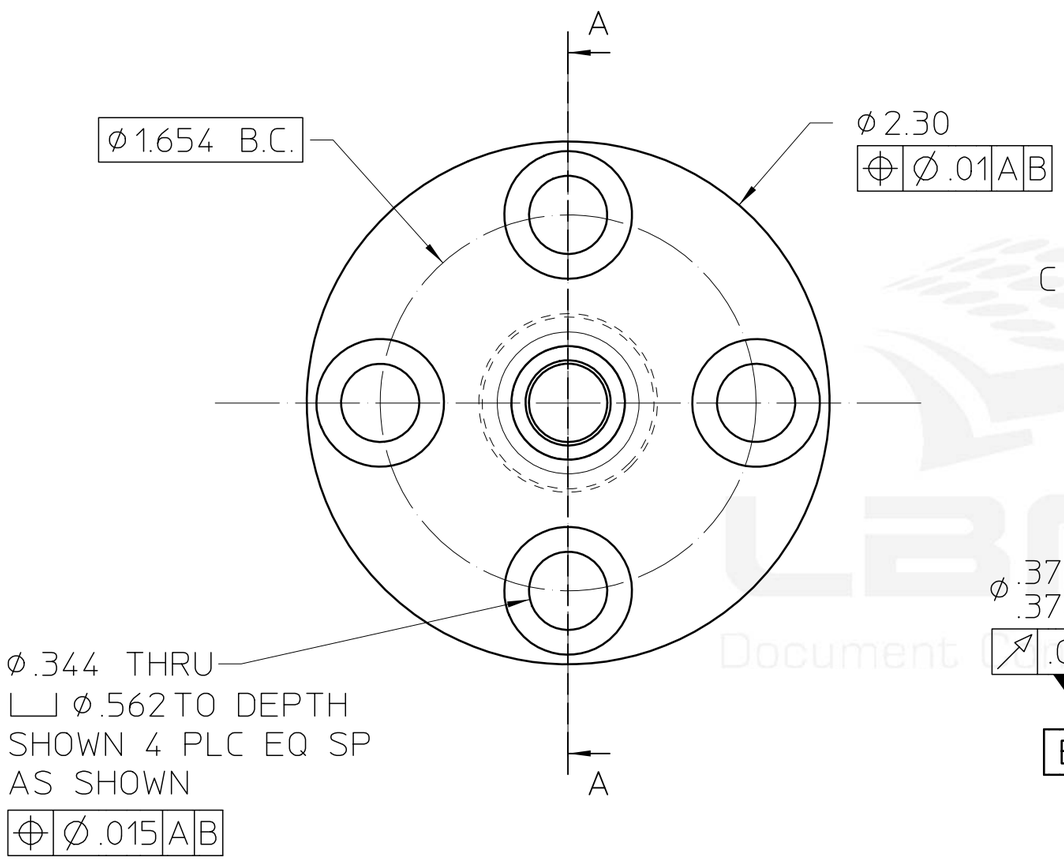

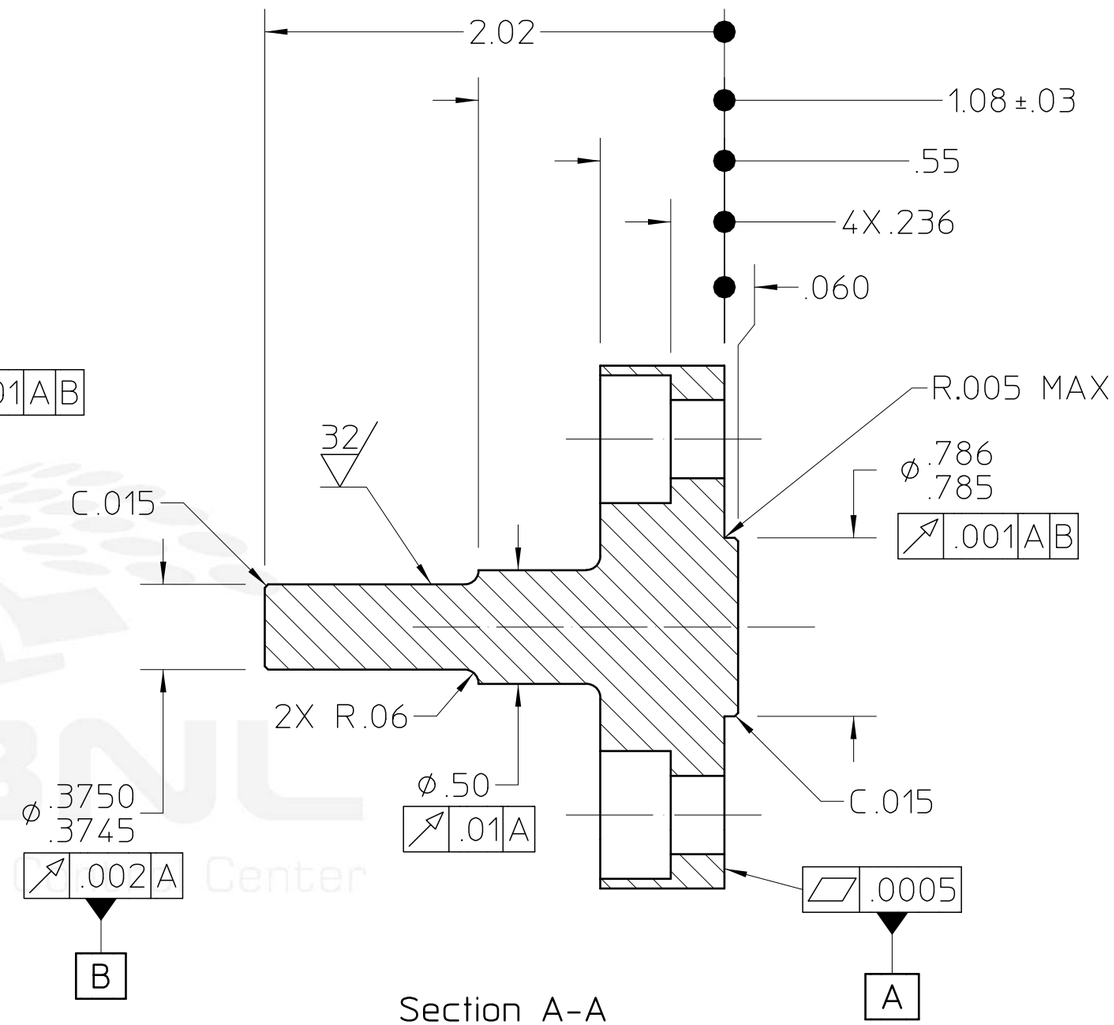

REV	AUTHOR	APPROVER	DATE	CHANGE DESCRIPTION
C	tmiller	kelez	10-23-09	REDESIGNED
B	tmiller	tmiller	05-30-07	ADDED GD&T
A	tmiller	tmiller	05-29-07	INITIAL REVISION

UNLESS OTHERWISE SPECIFIED
TOLERANCES: .X ± .- .XX ± .01 .XXX ± .005
FRACTIONS: ± -/--
ANGLES: ± -.-°/INCH
MACH. SURFS.: 63 ✓ OR BETTER
REF: ASME Y14.5M-1994, THREADS ARE CLASS 2
BREAK EDGES .016 MAX. ON MACHINED WORK
REMOVE BURRS, WELD SPLATTER & LOOSE SCALE

MAT 2: , NOTES:
MAT 1: , STEEL, SAE 1144 OR 4140 NOTES:

PROJECT NAME: Advanced Light Source
UNIQUE NUMBER: AL-0031-8574
DO NOT SCALE PRINT
SCALE: 1.5 : 1
CATEGORY CODE: AL4041
THIRD ANGLE PROJECTION

ERNEST ORLANDO LAWRENCE
BERKELEY NATIONAL LABORATORY
UNIVERSITY OF CALIFORNIA
ALS - INSERTION DEVICE BEAMLINES
BL 4.0.3 - BEAMLINE GENERAL
DRIVE SHAFT
SHEET 1 OF 1 SIZE: B DWG NO: 26E727 REV C

Officially Released to the LBNL Document Control Center
Released: October 23rd, 2009 DCC Auth Key: NO5TVF2JAIP
Downloaded by: Nicholas Kelez at October 27, 2009 10:53:26
AUTO GENERATED PDF
Oct 23 2009 12:19:16 PST