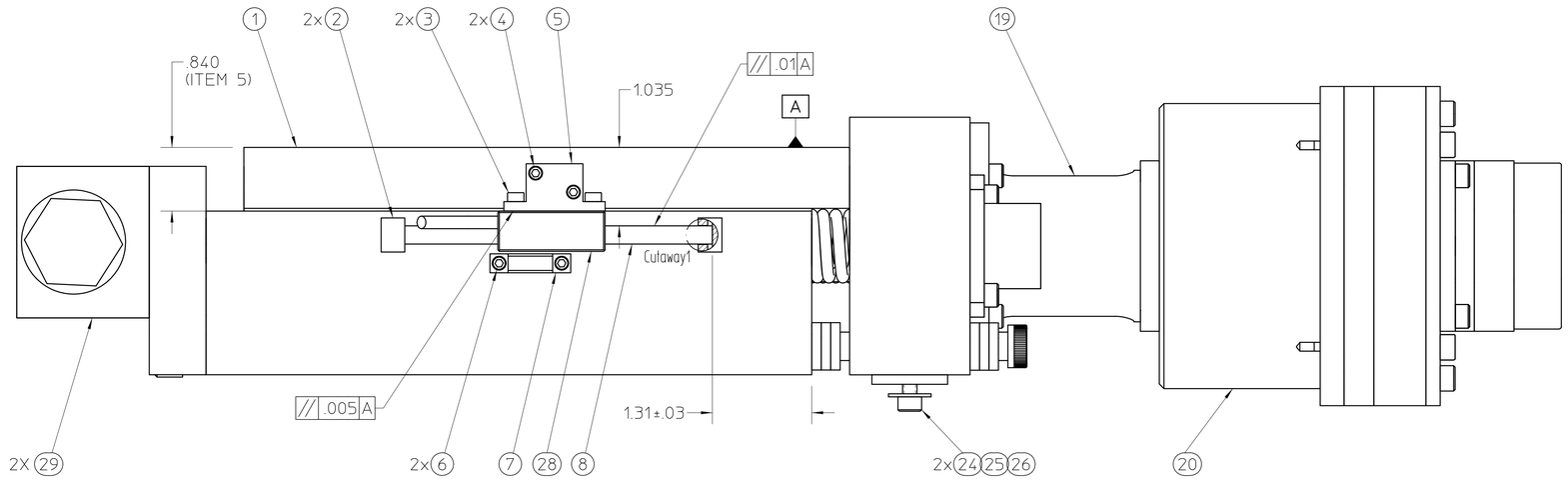

ITEM 27 OMITTED FROM VIEW

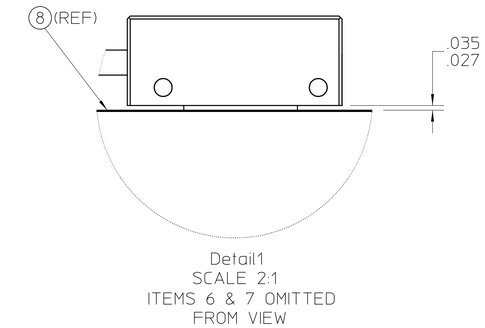

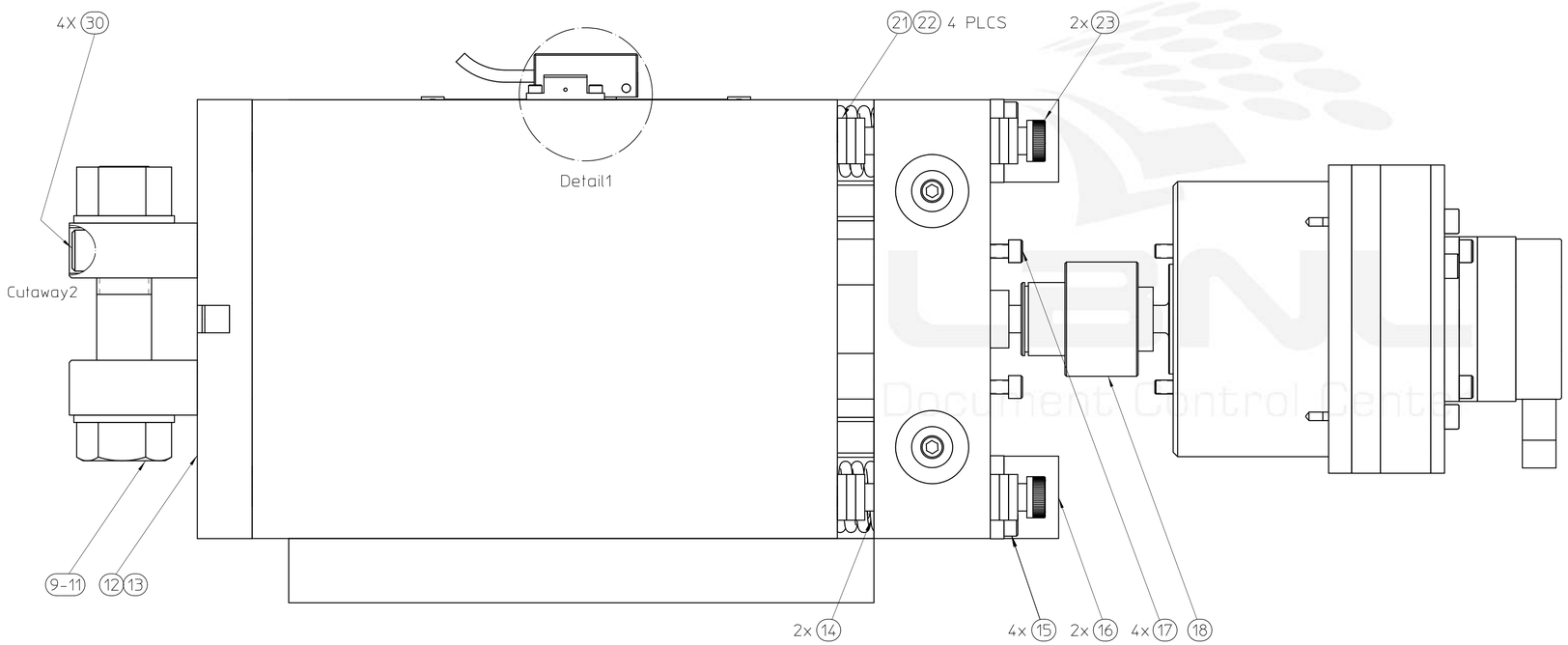

ITEMS 19 & 27 OMITTED FROM VIEW

	4	30		3/8-16 x 2.00 LG SHCS STEEL OR SST
	2	29	26G965	CLEVIS BLOCK
	1	28		RGH24 READHEAD RENISHAW P/N RGH24Y50F33A
	1	27	26G425	COVER - ROLL SLIDE
	2	26		10-32 x .56 LG SHCS 18-8 SST
	2	25		PLAIN WASHER - #10 18-8 SST
	2	24	91117A201	FENDER WASHER - 1.00 OD x .219 ID STEEL McMASTER P/N
	2	23	90298A635	SHOULDER SCREW - 3/8 SHOULDER DIA x 2-3/4" LG 18-8 SST McMASTER P/N
4	1 PKG	22	92678A441	SPACER - .625 OD x .375 ID x .063 THK BRASS McMASTER P/N
4	2 PKG	21	92678A515	SPACER - .625 OD x .375 ID x .125 THK BRASS McMASTER P/N
5	1	20	26G905	MOTOR AND GEARBOX ASSEMBLY - HARMONIC DRIVE
	1	19	26G904	SLIDE TO NEMA 23 ADAPTER
	1	18	TT1X .375 25	TORQUE LIMITING COUPLING 3/8 X 3/8 SHAFTS 25 IN LB SETTING ZEROMAX P/N
	4	17		10-32 x 1/2" LG SHCS ALLOY STEEL
6	2	16	26E721	SPRING RETAINER
6	4	15		10-32 x 3/4" LG SHCS 18-8 SST
6	2	14	72481	COMPRESSION SPRING .975" OD x .679" ID CENTURY P/N
	3	13		3/8-16 x 1" LG SHCS STEEL OR 18-8 SST
	1	12	26E623	CLEVIS BASE
	1	11		3/4-10 STEEL HEX NUT
	2	10		PLAIN WASHER - 3/4" ID x 1-3/8 OD x .1 THK STEEL OR 18-8 SST
	1	9		3/4-10 x 3.50" LG HEX HEAD BOLT STEEL
	1	8		20 MICRON PITCH TAPE SCALE. RENISHAW RGS20-S 4.25" LG
	1	7	A-9541-0037	90º REFERENCE MARK MAGNET. RENISHAW P/N
	2	6		4-40 x 5/16 SHCS 18-8 SST
	1	5	26E612	BRACKET - RENISHAW READ HEAD
	2	4		4-40 x 9/16 SHCS 18-8 SST
	2	3		M3 x 8mm SHCS 18-8 SST
	2	2	26E746	RENISHAW SCALE CLAMP
	1	1	26E690	SLIDE - ROLL MECHANISM
	REQD	ITEM	PART NO.	DESCRIPTION

NOTES:
1. ALL DIMENSIONS ARE IN INCHES.
2. ALL DIMENSIONS SHOWN ARE NOMINAL AND MAY REQUIRE FIELD ADJUSTMENT FOR PROPER OPERATION.
3. AFTER PROPER OPERATION OF THE ENCODER IS VERIFIED, GLUE ITEMS 2 TO ITEMS 1 & 8 WITH DEXTER HYSOL EA 9309.
4. USE ITEMS 21 AND 22 TO ADJUST TRAVEL AS REQUIRED.
5. OTHER Ø.375 SHAFT NEMA 23 GEARBOXES AND MOTORS MAY BE SUBSTUTED FOR THIS UNIT TO REDUCE COST OR OVERALL SIZE. LOWER RATIO BOXES MAY REQUIRE MICROSTEPPING TO ACHEIVE THE SAME RESOLUTION.
6. ITEMS 14 PROVIDE AN EXTRA 190 LB OF LOAD CAPACITY WITH THE SLIDE IN THE MIDDLE OF TRAVEL, 105 LB AT FULL EXTENSION AND 280 LB AT FULL RETRACT. THE NOMINAL LOAD CAPACITY OF THE SLIDE IS 300LB WITHOUT SPRINGS. WHILE SPRINGS ARE RECOMMENDED FOR HORIZONTAL APPLICATIONS, DO NOT USE THEM IN VERTICAL APPLICATIONS UNLESS THE SLIDE LOAD EXCEEDS 300 LB. IF SPRINGS ARE NOT USED, ITEMS 15 AND 16 MAY ALSO BE OMITTED.
7. TIGTHEN ITEMS 30 FINGER-TIGHT PRIOR TO INSTALLING STRUT. TIGTHEN ITEMS 30 AFTER ITEM 9 IS TORQUED.

REV	AUTHOR	APPROVER	DATE	CHANGE DESCRIPTION
G	tmiller	kelez	10-23-09	MODIFIED ASSY FOR 6 BEAM COUPLING
F	tmiller	tmiller	04-17-09	ADDED TRAVEL STOP DETAIL ITEMS 27-29. CORRECTED ITEM 21 SPECIFICATION
E	tmiller	tmiller	09-09-08	REDESIGNED
D	tmiller	tmiller	12-18-07	ADDED ITEMS 24 AND 25 TO BOM
C	tmiller	tmiller	10-18-07	CORRECTED ITEM 23 DESCRIPTION AND DELETED ITEM 15 FROM BOM
B	tmiller	tmiller	08-21-07	CORRECTED BOM
A	tmiller	tmiller	08-03-07	INITIAL REVISION

UNLESS OTHERWISE SPECIFIED
TOLERANCES: .X± .- .XX± .-- .XXX± .01; FRACTIONS: ± -/--; ANGLES: ± -.-°/INCH; MACH. SURFS.: 125√ OR BETTER
REF: ASME Y14.5M-1994, THREADS ARE CLASS 2
BREAK EDGES .016 MAX. ON MACHINED WORK
REMOVE BURRS, WELD SPLATTER & LOOSE SCALE

PROJECT NAME: Advanced Light Source
UNIQUE NUMBER: AL-0031-1075
DO NOT SCALE PRINT — CATEGORY CODE: AL4041
SCALE: 1:1
THIRD ANGLE PROJECTION

ERNEST ORLANDO LAWRENCE
BERKELEY NATIONAL LABORATORY
UNIVERSITY OF CALIFORNIA

ALS - INSERTION DEVICE BEAMLINES
BL 4.0.3 - BEAMLINE GENERAL
ROLL MECHANISM ASSY

SHEET 1 OF 1 | SIZE: D | DWG NO: 26E758 | REV G

Officially Released to the LBNL Document Control Center
Released: October 23rd, 2009 DCC Auth Key: UWWUDMK7QT
Downloaded by: Nicholas Kelez at October 26, 2009 10:53:41
AUTO GENERATED PDF
Oct 23 2009 12:20:15 PST