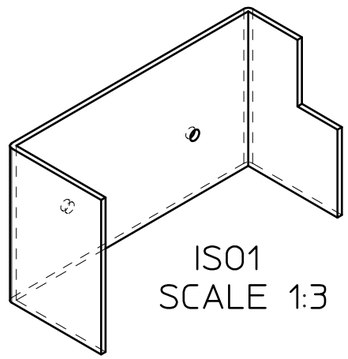

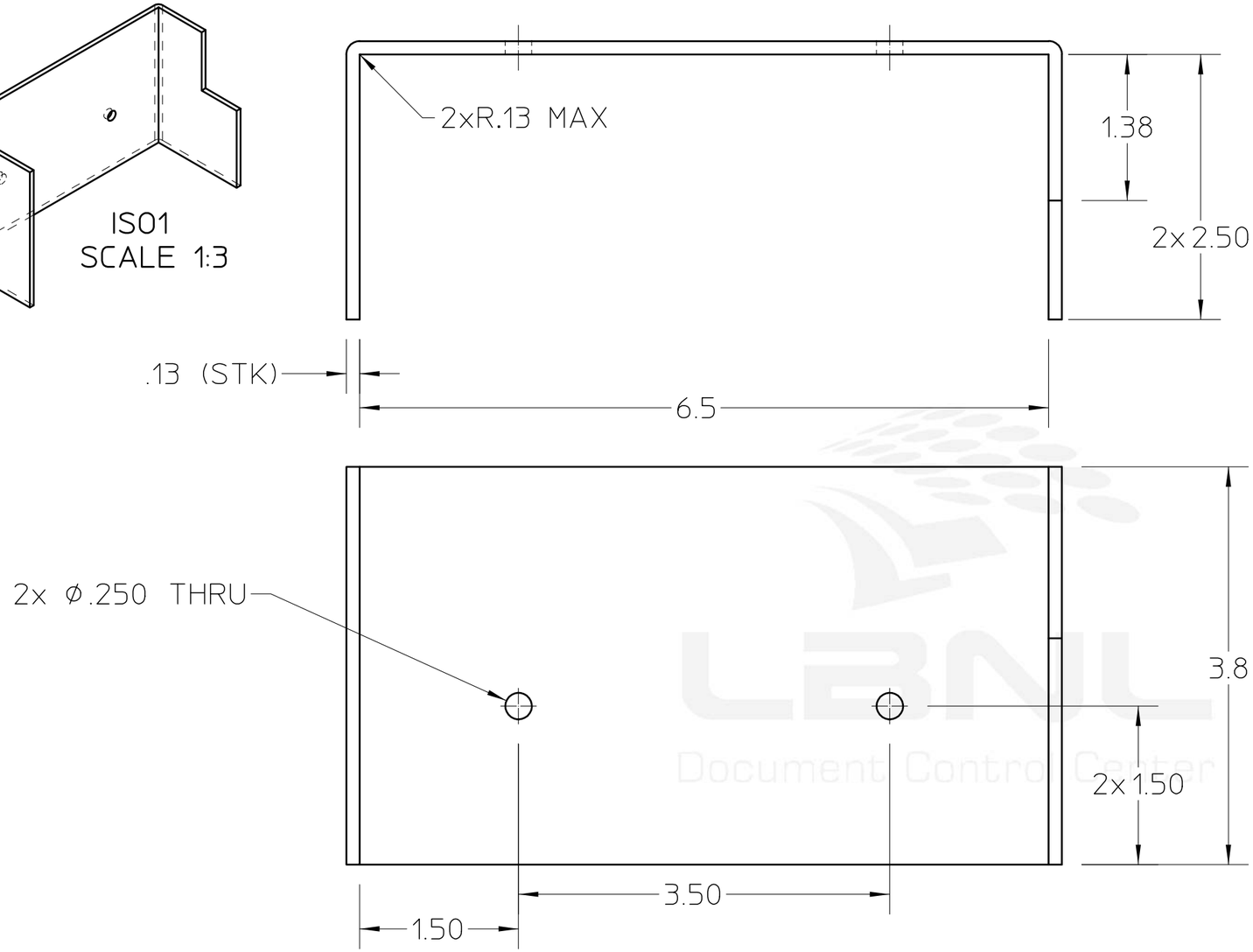

NOTES:
1. ALL DIMENSIONS ARE IN INCHES.
2. DEGREASE.

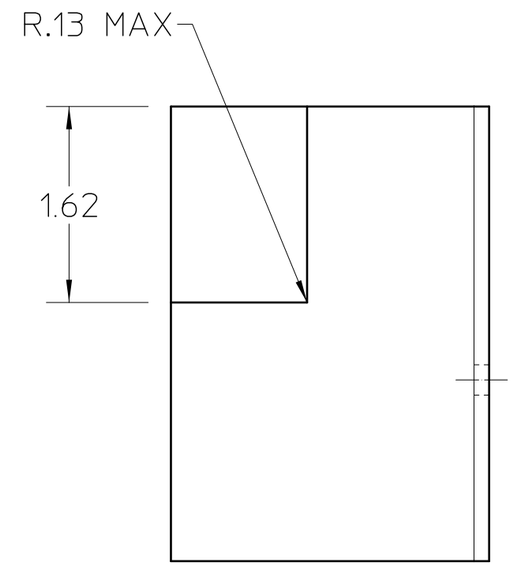

REV	AUTHOR	APPROVER	DATE	CHANGE DESCRIPTION
B	tmiller	tmiller	04-17-09	ADDED 1.38 X 1.62 NOTCH
A	tmiller	tmiller	04-17-09	INITIAL REVISION

UNLESS OTHERWISE SPECIFIED
TOLERANCES: .X± .06 .XX± .03 .XXX± .010
FRACTIONS: ± -/--
ANGLES: ± 5°
MACH. SURFS.: 125✓ OR BETTER
REF: ASME Y14.5M-1994, THREADS ARE CLASS 2
BREAK EDGES .016 MAX. ON MACHINED WORK
REMOVE BURRS, WELD SPLATTER & LOOSE SCALE

MAT 2: , NOTES:
MAT 1: , LEXAN NOTES:

PROJECT NAME: Advanced Light Source
UNIQUE NUMBER: AL-0048-0843
DO NOT SCALE PRINT
SCALE: 1:1.25
CATEGORY CODE: AL 4 0 4 1
THIRD ANGLE PROJECTION

ERNEST ORLANDO LAWRENCE
BERKELEY NATIONAL LABORATORY
UNIVERSITY OF CALIFORNIA

ALS - INSERTION DEVICE BEAMLINES
BL 4.0.3 - BEAMLINE GENERAL
COVER - ROLL SLIDE

SHEET 1 OF 1 | SIZE: B | DWG NO: 26G425 | REV B

AUTO GENERATED PDF
Apr 17 2009 16:28:11 PST

Officially Released to the LBNL Document Control Center
Released: April 17th, 2009 DCC Auth Key: OXBSTX8GOH
Downloaded by: Nicholas Kelez at October 26, 2009 10:58:47