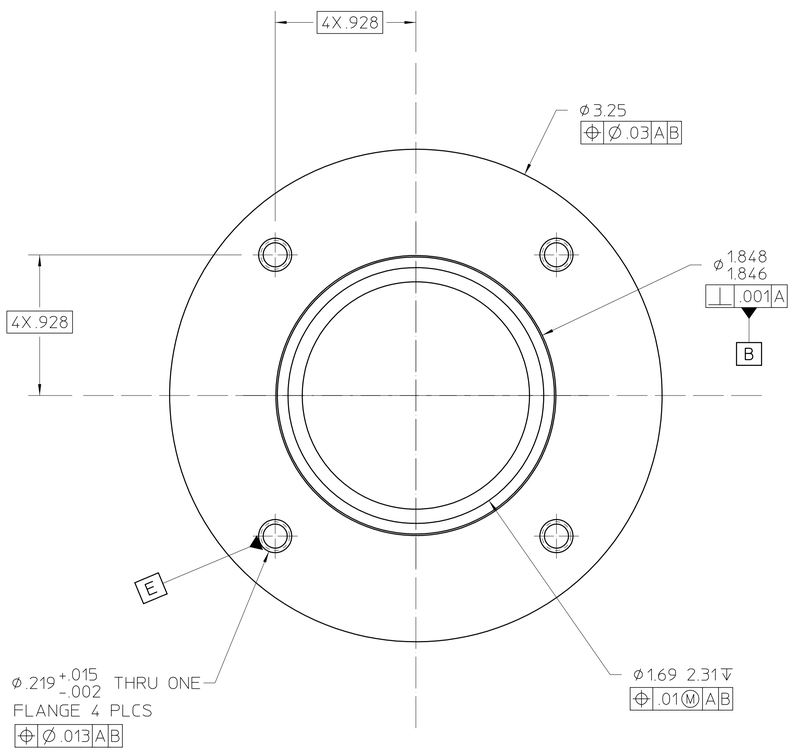

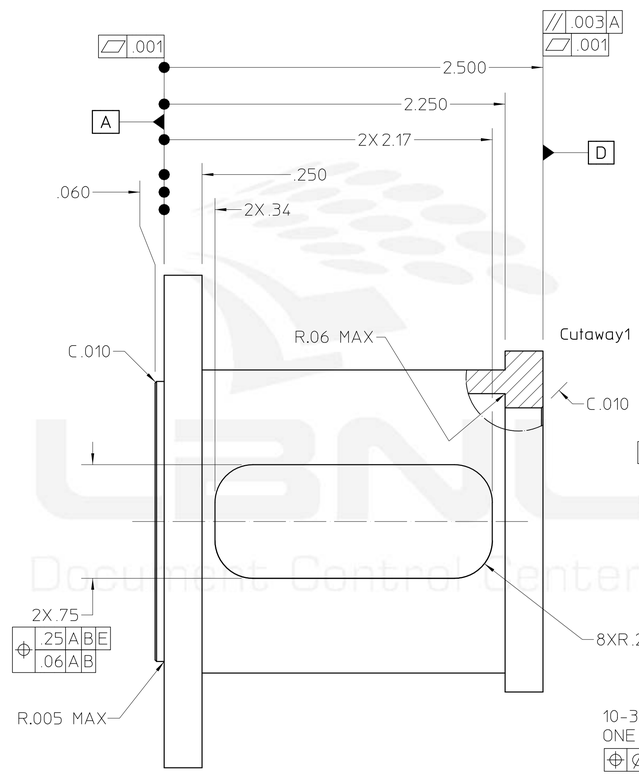

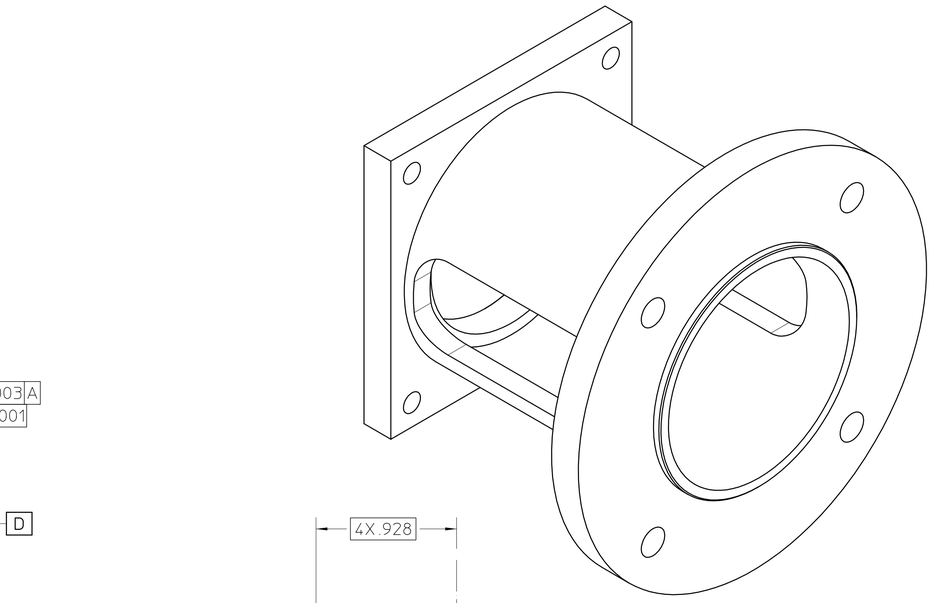

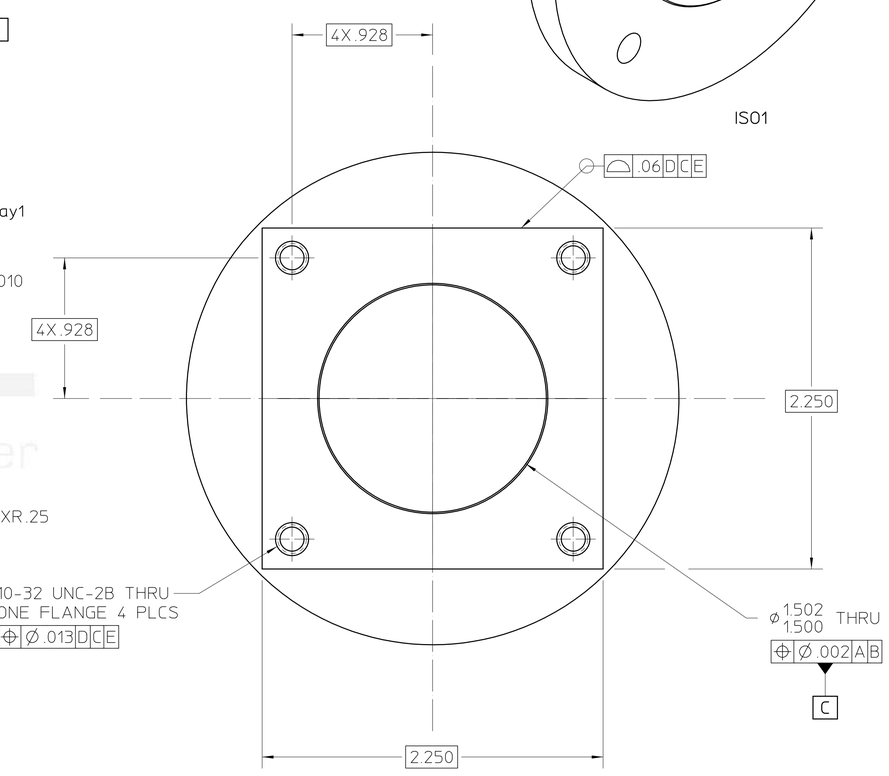

NOTES:
1. ALL DIMENSIONS ARE IN INCHES AND APPLY AFTER PLATING.
2. NOT ALL HIDDEN LINES SHOWN.
3. CLEAR ANODIZE.

REV	AUTHOR	APPROVER	DATE	CHANGE DESCRIPTION
A	tmiller	kelez	10-23-09	INITIAL REVISION

UNLESS OTHERWISE SPECIFIED
TOLERANCES: .X ± .1 .XX ± .02 .XXX ± .005; FRACTIONS: ± 1/16; ANGLES: ± 5°; MACH. SURFS.: 63 ✓ OR BETTER
REF: ASME Y14.5M-1994, THREADS ARE CLASS 2
BREAK EDGES .016 MAX. ON MACHINED WORK
REMOVE BURRS, WELD SPLATTER & LOOSE SCALE

MAT 2: . NOTES:
MAT 1: , ALUMINUM 6061-T6 NOTES:

PROJECT NAME: Advanced Light Source
UNIQUE NUMBER: AL-0051-2769
DO NOT SCALE PRINT SCALE: 2 : 1
CATEGORY CODE: AL4041
THIRD ANGLE PROJECTION

ERNEST ORLANDO LAWRENCE
BERKELEY NATIONAL LABORATORY
UNIVERSITY OF CALIFORNIA

ALS - INSERTION DEVICE BEAMLINES
BL 4.0.3 - BEAMLINE GENERAL
SLIDE TO NEMA 23 ADAPTER

SHEET 1 OF 1 SIZE: D DWG NO: 26G904 REV A

AUTO GENERATED PDF
Oct 23 2009 12:22:13 PST

Officially Released to the LBNL Document Control Center
Released: October 23rd, 2009 DCC Auth Key: RYQ6V6YYGO
Downloaded by: Nicholas Kelez at October 26, 2009 10:59:36