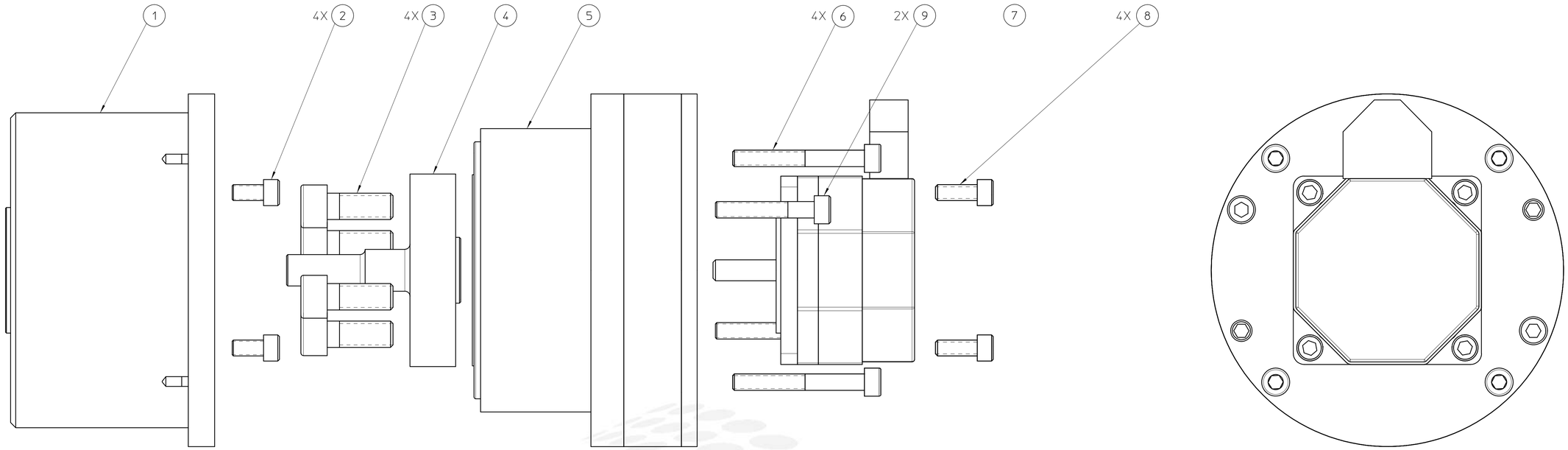

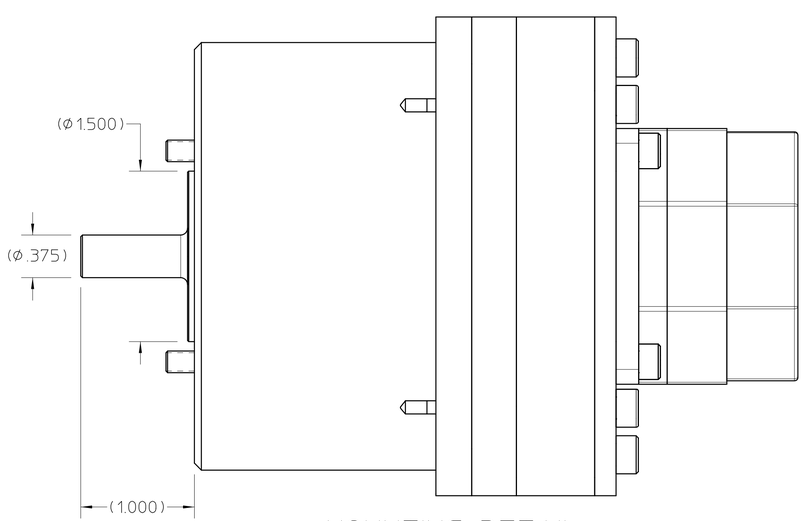

MOUNTING DETAIL

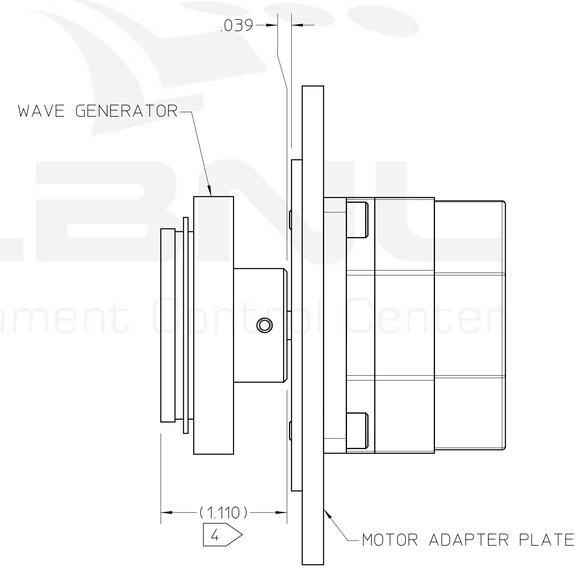

WAVE GENERATOR SETUP DETAIL

NOTES:
1. ALL DIMENSIONS ARE IN INCHES.
2. THE -160 IN THE P/N REFERS TO THE RATIO. OTHER RATIOS ARE AVAILABLE.
3. MOUNT ITEM 7 TO MOTOR ADAPTER PLATE WITH ITEMS 8. MOUNT WAVE GENERATOR TO MOTOR SHAFT AS SHOWN. EXERCISE CAUTION WHEN INSERTING WAVE GENERATOR INTO FLEXSPLINE. DO NOT FORCE.
4. OVERALL LENGTH FOR WAVE GENERATOR TAKEN FROM DELIVERED PART. THIS DIMENSION DOES NOT MATCH THE CATALOG VALUE AND SHOULD BE VERIFIED IF USED TO SET WAVE GENERATOR POSITION ON MOTOR SHAFT.
5. EXERCISE CAUTION IN MOTOR SELECTION AND CURRENT LIMITS TO PREVENT DAMAGE TO GEARHEAD AND DRIVEN MECHANISMS.

	ITEM	REQD	PART NO.	DESCRIPTION
	9	2		M5 X 30 SHCS (INCL. WITH ITEM 5)
	8	4		10-24 X 1/2 SHCS - ALLOY STEEL
5.	7	1		STEPPER MOTOR - NEMA 23 HALF-HEIGHT NO ENCODER
	6	4		M5 X 40 SHCS - ALLOY STEEL
2.	5	1		GEARBOX, HARMONIC DRIVE P/N CSF-25-160-2UH-SPA1968
	4	1	26E727	DRIVE SHAFT
	3	4		M8 X 20 SHCS - ALLOY STEEL
	2	4		10-32 X 3/8 SHCS - ALLOY STEEL
	1	1	26E717	GEARBOX ADAPTER

REV	AUTHOR	APPROVER	DATE	CHANGE DESCRIPTION
A	tmiller	kelez	10-23-09	INITIAL REVISION

UNLESS OTHERWISE SPECIFIED
TOLERANCES: .X± .- .XX± .-- .XXX± .004; FRACTIONS: ± -/--; ANGLES: ± -.-°/INCH; MACH. SURFS.: 125√ OR BETTER
REF: ASME Y14.5M-1994, THREADS ARE CLASS 2
BREAK EDGES .016 MAX. ON MACHINED WORK
REMOVE BURRS, WELD SPLATTER & LOOSE SCALE

PROJECT NAME: Advanced Light Source
UNIQUE NUMBER: AL-0031-7710
DO NOT SCALE PRINT — SCALE: 1.5:1
CATEGORY CODE: AL2010
THIRD ANGLE PROJECTION

ERNEST ORLANDO LAWRENCE BERKELEY NATIONAL LABORATORY
UNIVERSITY OF CALIFORNIA
ALS - BEAMLINES
MECHANICAL SYSTEMS - GENERAL
MOTOR AND GEARBOX ASSEMBLY - HARMONIC DRIVE

SHEET 1 OF 1 | SIZE: D | DWG NO: 26G905 | REV A

AUTO GENERATED PDF
Oct 23 2009 12:23:14 PST

Officially Released to the LBNL Document Control Center
Released: October 23rd, 2009 DCC Auth Key: R7WN66DKJ5
Downloaded by: Nicholas Kelez at October 26, 2009 10:59:19